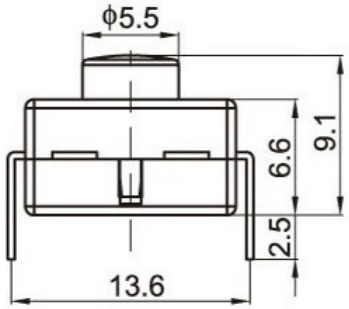


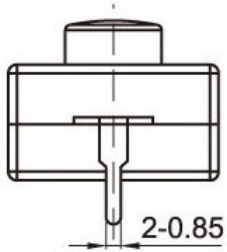


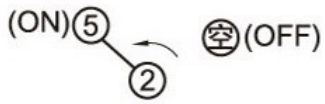


ON-OFF

SCHEMATIC (NON-SHORTING)

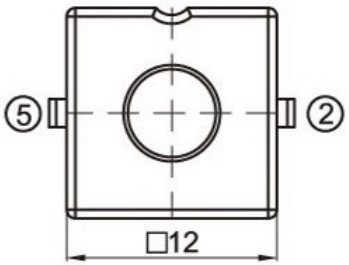


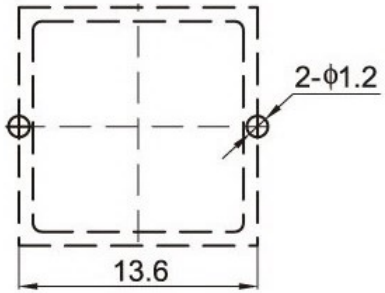


印制线路板
P.C.B

注："*"□表示关键尺寸(3个).

| NO. | PARTS | MATERIALS | Q'TY | |
|---|---|---|---|---|
| 8 | | | | |
| 7 | | | | |
| 6 | | | | |
| 5 | SPRING | SUS | 1 | NATURAL |
| 4 | CAM STICK | SUS | 1 | NATURAL |
| 3 | CASE | PA66/BRASS STRIP | 1 | GREY/Ag PLATED |
| 2 | COVER | PA66 | 1 | BLACK |
| 1 | KNOB | PA66/PBS C5210R-EH | 1 | WHITE/Ag CLAD |

TOLERANCE UNLESS SPECIFIED
WITHIN 1.5mm : ±0.1mm
OVER 1.5mm : ±0.2mm

| ISSUE | DATE | DESCRIPTIONS OF REVISION | APPD. |
|---|---|---|---|
| A | 2012-8-13 | 初 版 | |

TITLE : VERTICAL PUSH SWITCH
UNIT : mm
DRWG NO.:
MODEL:
SCALE: 5:1

| | | |
|---|---|---|
| DWN. | | 2012-8-13 |
| CHK'D | | 2012-8-13 |
| APPD. | | |

东莞市高迪电子有限公司